ADC101S021 Single Channel, 50 to 200 ksps, 10-Bit A/D Converter

Check for Samples: ADC101S021

FEATURES

- **Specified Over a Range of Sample Rates.**
- **6-Lead WSON and SOT-23 Packages**
- **Variable Power Management**
- **Single Power Supply with 2.7V - 5.25V Range**
- **SPI™/QSPI™/MICROWIRE/DSP Compatible**

APPLICATIONS

- **Portable Systems**
- **Remote Data Acquisition**
- **Instrumentation and Control Systems**

DESCRIPTION

The ADC101S021 is a low-power, single channel CMOS 10-bit analog-to-digital converter with a high-speed serial interface. Unlike the conventional practice of specifying performance at a single sample rate only, the ADC101S021 is fully specified over a sample rate range of 50 ksps to 200 ksps. The converter is based upon a successive-approximation register architecture with an internal track-and-hold circuit.

The output serial data is straight binary, and is compatible with several standards, such as SPI™, QSPI™, MICROWIRE, and many common DSP serial interfaces.

The ADC101S021 operates with a single supply that can range from +2.7V to +5.25V. Normal power consumption using a +3.6V or +5.25V supply is 2.34 mW and 8.9 mW, respectively. The power-down feature reduces the power consumption to as low as 2.6 µW using a +5.25V supply.

The ADC101S021 is packaged in 6-lead WSON and SOT-23 packages. Operation over the industrial temperature range of −40°C to +85°C is ensured.

These devices have limited built-in ESD protection. The leads should be shorted together or the device placed in conductive foam during storage or handling to prevent electrostatic damage to the MOS gates.

Table 1. Key Specifications

		VALUE	UNIT
DNL		+0.16 / -0.09	LSB (typ)
INL		+0.14 / -0.13	LSB (typ)
SNR		61.6	dB (typ)
Power Consumption	3.6V Supply	2.34	mW (typ)
	5.25V Supply	8.9	mW (typ)

Table 2. Pin-Compatible Alternatives by Resolution and Speed(1)

Resolution	Specified for Sample Rate Range of:		
	50 to 200 ksps	**200 to 500 ksps**	**500 ksps to 1 Msps**
12-bit	ADC121S021	ADC121S051	ADC121S101
10-bit	**ADC101S021**	ADC101S051	ADC101S101
8-bit	ADC081S021	ADC081S051	ADC081S101

(1) All devices are fully pin and function compatible.

Please be aware that an important notice concerning availability, standard warranty, and use in critical applications of Texas Instruments semiconductor products and disclaimers thereto appears at the end of this data sheet.

All trademarks are the property of their respective owners.

PRODUCTION DATA information is current as of publication date. Products conform to specifications per the terms of the Texas Instruments standard warranty. Production processing does not necessarily include testing of all parameters.

Copyright © 2005–2013, Texas Instruments Incorporated

Connection Diagram

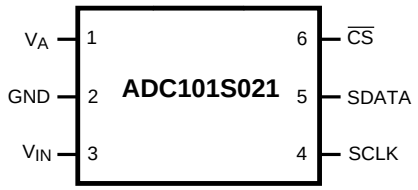

Figure 1. 6-Lead SOT-23 or WSON See DBV or NGF Package

Block Diagram

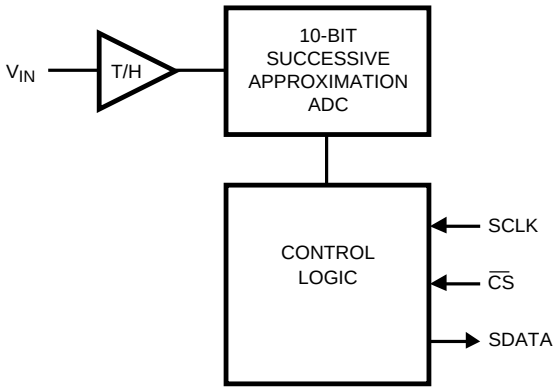

PIN DESCRIPTIONS AND EQUIVALENT CIRCUITS

Pin No.	Symbol	Description
ANALOG I/O		
3	V_{IN}	Analog input. This signal can range from 0V to V_A.
DIGITAL I/O		
4	SCLK	Digital clock input. This clock directly controls the conversion and readout processes.
5	SDATA	Digital data output. The output samples are clocked out of this pin on falling edges of the SCLK pin.
6	$\overline{CS}$	Chip select. On the falling edge of $\overline{CS}$, a conversion process begins.
POWER SUPPLY		
1	V_A	Positive supply pin. This pin should be connected to a quiet +2.7V to +5.25V source and bypassed to GND with a 1 µF capacitor and a 0.1 µF monolithic capacitor located within 1 cm of the power pin.
2	GND	The ground return for the supply and signals.
PAD	GND	For package suffix CISD(X) only, it is recommended that the center pad should be connected to ground.

Copyright © 2005–2013, Texas Instruments Incorporated

Absolute Maximum Ratings [1][2][3]

Analog Supply Voltage V_A	−0.3V to 6.5V
Voltage on Any Analog Pin to GND	−0.3V to (V_A +0.3V)
Voltage on Any Digital Pin to GND	−0.3V to 6.5V
Input Current at Any Pin [4]	±10 mA
Package Input Current [4]	±20 mA
Power Consumption at T_A = 25°C	See [5]
ESD Susceptibility [6] Human Body Model Machine Model	 3500V 300V
Junction Temperature	+150°C
Storage Temperature	−65°C to +150°C

(1) Absolute Maximum Ratings indicate limits beyond which damage to the device may occur. Operating Ratings indicate conditions for which the device is functional, but do not ensure specific performance limits. For ensured specifications and test conditions, see the Electrical Characteristics. The ensured specifications apply only for the test conditions listed. Some performance characteristics may degrade when the device is not operated under the listed test conditions.
(2) If Military/Aerospace specified devices are required, please contact the Texas Instruments Sales Office/ Distributors for availability and specifications.
(3) All voltages are measured with respect to GND = 0V, unless otherwise specified.
(4) When the input voltage at any pin exceeds the power supply (that is, V_{IN} < GND or V_{IN} > V_A), the current at that pin should be limited to 10 mA. The 20 mA maximum package input current rating limits the number of pins that can safely exceed the power supplies with an input current of 10 mA to two. The Absolute Maximum Rating specification does not apply to the V_A pin. The current into the V_A pin is limited by the Analog Supply Voltage specification.
(5) The absolute maximum junction temperature ($T_J$max) for this device is 150°C. The maximum allowable power dissipation is dictated by $T_J$max, the junction-to-ambient thermal resistance (θ_{JA}), and the ambient temperature (T_A), and can be calculated using the formula $P_D$max = ($T_J$max − T_A) / θ_{JA}. The values for maximum power dissipation listed above will be reached only when the device is operated in a severe fault condition (e.g. when input or output pins are driven beyond the power supply voltages, or the power supply polarity is reversed). Obviously, such conditions should always be avoided.
(6) Human body model is 100 pF capacitor discharged through a 1.5 kΩ resistor. Machine model is 220 pF discharged through zero ohms.

Operating Ratings [1][2]

Operating Temperature Range	−40°C ≤ T_A ≤ +85°C
V_A Supply Voltage	+2.7V to +5.25V
Digital Input Pins Voltage Range (regardless of supply voltage)	−0.3V to 5.25V
Analog Input Pins Voltage Range	0V to V_A
Clock Frequency	25 kHz to 20 MHz
Sample Rate	up to 1Msps

(1) Absolute Maximum Ratings indicate limits beyond which damage to the device may occur. Operating Ratings indicate conditions for which the device is functional, but do not ensure specific performance limits. For ensured specifications and test conditions, see the Electrical Characteristics. The ensured specifications apply only for the test conditions listed. Some performance characteristics may degrade when the device is not operated under the listed test conditions.
(2) All voltages are measured with respect to GND = 0V, unless otherwise specified.

Package Thermal Resistance

Package	θ_{JA}
6-lead WSON	94°C / W
6-lead SOT-23	265°C / W
Soldering process must comply with Reflow Temperature Profile specifications. Refer to http://www.ti.com/packaging.[1]	

(1) Reflow temperature profiles are different for lead-free and non-lead-free packages.

Copyright © 2005–2013, Texas Instruments Incorporated

ADC101S021 Converter Electrical Characteristics (1)(2)

The following specifications apply for V_A = +2.7V to 5.25V, f_{SCLK} = 1 MHz to 4 MHz, f_{SAMPLE} = 50 ksps to 200 ksps, C_L = 15 pF, unless otherwise noted. **Boldface limits apply for $T_A = T_{MIN}$ to T_{MAX}**: all other limits T_A = 25°C.

Symbol	Parameter	Conditions	Typical	Limits (2)	Units
STATIC CONVERTER CHARACTERISTICS					
	Resolution with No Missing Codes				Bits
INL	Integral Non-Linearity	V_A = +2.7 to +3.6V	+0.14	**±0.7**	LSB (max)
			−0.13		LSB (min)
		V_A = +4.75 to +5.25V	+0.14	**±0.7**	LSB (max)
			−0.13		LSB (min)
DNL	Differential Non-Linearity	V_A = +2.7 to +3.6V	+0.12	**±0.6**	LSB (max)
			−0.07		LSB (min)
		V_A = +4.75 to +5.25V	+0.16	**±0.6**	LSB (min)
			−0.09		LSB (min)
V_{OFF}	Offset Error	V_A = +2.7V to +3.6V	−0.09	**±0.7**	LSB (max)
		V_A = +4.75 to +5.25V			
GE	Gain Error	V_A = +2.7V to +3.6V	−0.06	**±1.0**	LSB (max)
		V_A = +4.75 to +5.25V	−0.27		
DYNAMIC CONVERTER CHARACTERISTICS					
SINAD	Signal-to-Noise Plus Distortion Ratio	V_A = +2.7 to 5.25V f_{IN} = 100 kHz, −0.02 dBFS	61.5	**60.7**	dB (min)
SNR	Signal-to-Noise Ratio	V_A = +2.7 to 5.25V f_{IN} = 100 kHz, −0.02 dBFS	61.6	**61**	dB (min)
THD	Total Harmonic Distortion	V_A = +2.7 to 5.25V f_{IN} = 100 kHz, −0.02 dBFS	−79	**−72.5**	dB (max)
SFDR	Spurious-Free Dynamic Range	V_A = +2.7 to 5.25V f_{IN} = 100 kHz, −0.02 dBFS	79	**74**	dB (min)
ENOB	Effective Number of Bits	V_A = +2.7 to 5.25V f_{IN} = 100 kHz, −0.02 dBFS	9.9	**9.8**	Bits (min)
IMD	Intermodulation Distortion, Second Order Terms	V_A = +5.25V f_a = 103.5 kHz, f_b = 113.5 kHz	−83		dB
	Intermodulation Distortion, Third Order Terms	V_A = +5.25V f_a = 103.5 kHz, f_b = 113.5 kHz	−82		dB
FPBW	-3 dB Full Power Bandwidth	V_A = +5V	11		MHz
		V_A = +3V	8		MHz
ANALOG INPUT CHARACTERISTICS					
V_{IN}	Input Range		0 to V_A		V
I_{DCL}	DC Leakage Current			**±1**	µA (max)
C_{INA}	Input Capacitance	Track Mode	30		pF
		Hold Mode	4		pF
DIGITAL INPUT CHARACTERISTICS					
V_{IH}	Input High Voltage	V_A = +5.25V		**2.4**	V (min)
		V_A = +3.6V		**2.1**	V (min)
V_{IL}	Input Low Voltage	V_A = +5V		**0.8**	V (max)
		V_A = +3V		**0.4**	V (max)
I_{IN}	Input Current	V_{IN} = 0V or V_A	±0.1	**±1**	µA (max)
C_{IND}	Digital Input Capacitance		2	**4**	pF (max)

(1) Tested limits are specified to TI's AOQL (Average Outgoing Quality Level).
(2) Data sheet min/max specification limits are ensured by design, test, or statistical analysis.

Copyright © 2005–2013, Texas Instruments Incorporated

ADC101S021 Converter Electrical Characteristics [1][2] (continued)

The following specifications apply for V_A = +2.7V to 5.25V, f_{SCLK} = 1 MHz to 4 MHz, f_{SAMPLE} = 50 ksps to 200 ksps, C_L = 15 pF, unless otherwise noted. **Boldface limits apply for $T_A = T_{MIN}$ to T_{MAX}**: all other limits T_A = 25°C.

Symbol	Parameter	Conditions	Typical	Limits [2]	Units
DIGITAL OUTPUT CHARACTERISTICS					
V_{OH}	Output High Voltage	I_{SOURCE} = 200 µA	V_A − 0.07	**V_A − 0.2**	V (min)
		I_{SOURCE} = 1 mA	V_A − 0.1		V
V_{OL}	Output Low Voltage	I_{SINK} = 200 µA	0.03	**0.4**	V (max)
		I_{SINK} = 1 mA	0.1		V
I_{OZH}, I_{OZL}	TRI-STATE® Leakage Current		±0.1	**±10**	µA (max)
C_{OUT}	TRI-STATE® Output Capacitance		2	**4**	pF (max)
	Output Coding		Straight (Natural) Binary		
POWER SUPPLY CHARACTERISTICS					
V_A	Supply Voltage			**2.7**	V (min)
				5.25	V (max)
I_A	Supply Current, Normal Mode (Operational, $\overline{CS}$ low)	V_A = +5.25V, f_{SAMPLE} = 200 ksps	1.7	**2.4**	mA (max)
		V_A = +3.6V, f_{SAMPLE} = 200 ksps	0.65	**1.1**	mA (max)
	Supply Current, Shutdown ($\overline{CS}$ high)	f_{SCLK} = 0 MHz, V_A = +5.25V f_{SAMPLE} = 0 ksps	500		nA
		V_A = +5.25V, f_{SCLK} = 4 MHz, f_{SAMPLE} = 0 ksps	60		µA
P_D	Power Consumption, Normal Mode (Operational, $\overline{CS}$ low)	V_A = +5.25V	8.9	**12.6**	mW (max)
		V_A = +3.6V	2.34	**4.0**	mW (max)
	Power Consumption, Shutdown ($\overline{CS}$ high)	f_{SCLK} = 0 MHz, V_A = +5.25V f_{SAMPLE} = 0 ksps	2.6		µW
		V_A = +5.25V, f_{SCLK} = 4 MHz, f_{SAMPLE} = 0 ksps	315		µW
AC ELECTRICAL CHARACTERISTICS					
f_{SCLK}	Clock Frequency	[3]		**1.0**	MHz (min)
				4.0	MHz (max)
f_S	Sample Rate	[3]		**50**	ksps (min)
				200	ksps (max)
DC	SCLK Duty Cycle	f_{SCLK} = 4 MHz	50	**40**	% (min)
				60	% (max)
t_{ACQ}	Minimum Time Required for Acquisition			**350**	ns (max)
	Throughput Time	Acquisition Time + Conversion Time		**20**	SCLK cycles
t_{QUIET}	[4]			**50**	ns (min)
t_{AD}	Aperture Delay		3		ns
t_{AJ}	Aperture Jitter		30		ps

(3) This is the frequency range over which the electrical performance is ensured. The device is functional over a wider range which is specified under Operating Ratings.
(4) Minimum Quiet Time required by bus relinquish and the start of the next conversion.

Copyright © 2005–2013, Texas Instruments Incorporated

ADC101S021 Timing Specifications

The following specifications apply for V_A = +2.7V to 5.25V, GND = 0V, f_{SCLK} = 1.0 MHz to 4.0 MHz, C_L = 25 pF, f_{SAMPLE} = 50 ksps to 200 ksps, **Boldface limits apply for $T_A = T_{MIN}$ to T_{MAX}**: all other limits T_A = 25°C.

Symbol	Parameter	Conditions	Typical	Limits	Units
t_{CS}	Minimum $\overline{CS}$ Pulse Width			**10**	ns (min)
t_{SU}	$\overline{CS}$ to SCLK Setup Time			**10**	ns (min)
t_{EN}	Delay from $\overline{CS}$ Until SDATA TRI-STATE Disabled (1)			**20**	ns (max)
t_{ACC}	Data Access Time after SCLK Falling Edge (2)	V_A = +2.7V to +3.6V		**40**	ns (max)
		V_A = +4.75V to +5.25V		**20**	ns (max)
t_{CL}	SCLK Low Pulse Width			**0.4 x t_{SCLK}**	ns (min)
t_{CH}	SCLK High Pulse Width			**0.4 x t_{SCLK}**	ns (min)
t_H	SCLK to Data Valid Hold Time	V_A = +2.7V to +3.6V		**7**	ns (min)
		V_A = +4.75V to +5.25V		**5**	ns (min)
t_{DIS}	SCLK Falling Edge to SDATA High Impedance (3)	V_A = +2.7V to +3.6V		**25**	ns (max)
				5	ns (min)
		V_A = +4.75V to +5.25V		**25**	ns (max)
				5	ns (min)
$t_{POWER-UP}$	Power-Up Time from Full Power-Down		1		µs

(1) Measured with the timing test circuit shown in Figure 2 and defined as the time taken by the output signal to cross 1.0V.
(2) Measured with the timing test circuit shown in Figure 2 and defined as the time taken by the output signal to cross 1.0V or 2.0V.
(3) t_{DIS} is derived from the time taken by the outputs to change by 0.5V with the timing test circuit shown in Figure 2. The measured number is then adjusted to remove the effects of charging or discharging the output capacitance. This means that t_{DIS} is the true bus relinquish time, independent of the bus loading.

Timing Diagrams

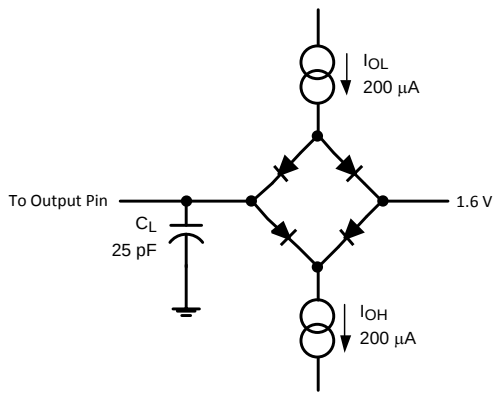

Figure 2. Timing Test Circuit

Copyright © 2005–2013, Texas Instruments Incorporated

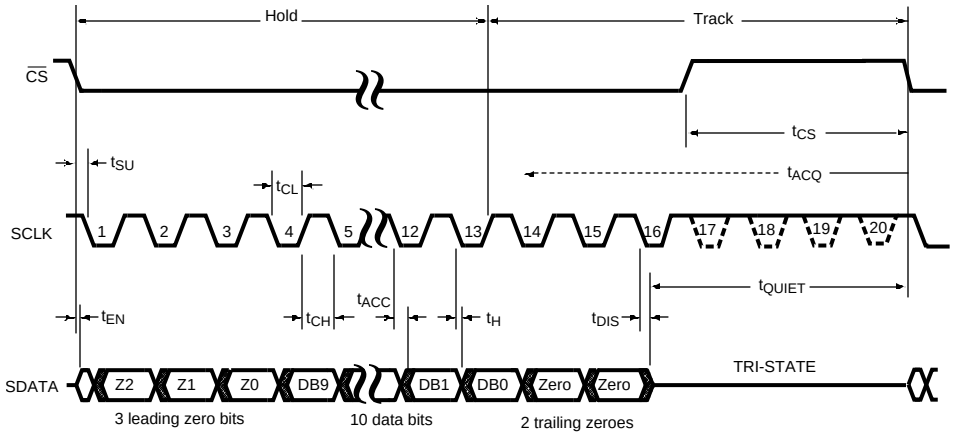

Figure 3. ADC101S021 Serial Timing Diagram

Specification Definitions

ACQUISITION TIME is the time required to acquire the input voltage. That is, it is time required for the hold capacitor to charge up to the input voltage. Acquisition time is measured backwards from the falling edge of $\overline{CS}$ when the signal is sampled and the part moves from track to hold. The start of the time interval that contains T_{ACQ} is the 13th rising edge of SCLK of the previous conversion when the part moves from hold to track. The user must ensure that the time between the 13th rising edge of SCLK and the falling edge of the next $\overline{CS}$ is not less than T_{ACQ} to meet performance specifications.

APERTURE DELAY is the time after the falling edge of $\overline{CS}$ when the input signal is acquired or held for conversion.

APERTURE JITTER (APERTURE UNCERTAINTY) is the variation in aperture delay from sample to sample. Aperture jitter manifests itself as noise in the output.

CONVERSION TIME is the time required, after the input voltage is acquired, for the ADC to convert the input voltage to a digital word. This is from the falling edge of $\overline{CS}$ when the input signal is sampled to the 16th falling edge of SCLK when the SDATA output goes into TRI-STATE.

DIFFERENTIAL NON-LINEARITY (DNL) is the measure of the maximum deviation from the ideal step size of 1 LSB.

DUTY CYCLE is the ratio of the time that a repetitive digital waveform is high to the total time of one period. The specification here refers to the SCLK.

EFFECTIVE NUMBER OF BITS (ENOB, or EFFECTIVE BITS) is another method of specifying Signal-to-Noise and Distortion or SINAD. ENOB is defined as (SINAD − 1.76) / 6.02 and says that the converter is equivalent to a perfect ADC of this (ENOB) number of bits.

FULL POWER BANDWIDTH is a measure of the frequency at which the reconstructed output fundamental drops 3 dB below its low frequency value for a full scale input.

GAIN ERROR is the deviation of the last code transition (111...110) to (111...111) from the ideal (V_{REF} − 1.5 LSB), after adjusting for offset error.

INTEGRAL NON-LINEARITY (INL) is a measure of the deviation of each individual code from a line drawn from negative full scale (½ LSB below the first code transition) through positive full scale (½ LSB above the last code transition). The deviation of any given code from this straight line is measured from the center of that code value.

INTERMODULATION DISTORTION (IMD) is the creation of additional spectral components as a result of two sinusoidal frequencies being applied to the ADC input at the same time. It is defined as the ratio of the power in the second and third order intermodulation products to the sum of the power in both of the original frequencies. IMD is usually expressed in dB.

Copyright © 2005–2013, Texas Instruments Incorporated

MISSING CODES are those output codes that will never appear at the ADC outputs. The ADC101S021 is ensured not to have any missing codes.

OFFSET ERROR is the deviation of the first code transition (000...000) to (000...001) from the ideal (i.e. GND + 0.5 LSB).

SIGNAL TO NOISE RATIO (SNR) is the ratio, expressed in dB, of the rms value of the input signal to the rms value of the sum of all other spectral components below one-half the sampling frequency, not including harmonics or d.c.

SIGNAL TO NOISE PLUS DISTORTION (S/N+D or SINAD) Is the ratio, expressed in dB, of the rms value of the input signal to the rms value of all of the other spectral components below half the clock frequency, including harmonics but excluding d.c.

SPURIOUS FREE DYNAMIC RANGE (SFDR) is the difference, expressed in dB, between the desired signal amplitude to the amplitude of the peak spurious spectral component, where a spurious spectral component is any signal present in the output spectrum that is not present at the input and may or may not be a harmonic.

TOTAL HARMONIC DISTORTION (THD) is the ratio, expressed in dB or dBc, of the rms total of the first five harmonic components at the output to the rms level of the input signal frequency as seen at the output. THD is calculated as

$$THD = 20 \cdot \log_{10} \sqrt{\frac{A_{f2}^2 + \ldots + A_{f6}^2}{A_{f1}^2}} \quad (1)$$

where

- A_{f1} is the RMS power of the input frequency at the output
- A_{f2} through A_{f6} are the RMS power in the first 5 harmonic frequencies

THROUGHPUT TIME is the minimum time required between the start of two successive conversion. It is the acquisition time plus the conversion time.

Copyright © 2005–2013, Texas Instruments Incorporated

Typical Performance Characteristics

T_A = +25°C, f_{SAMPLE} = 50 ksps to 200 ksps, f_{SCLK} = 1 MHz to 4 MHz, f_{IN} = 100 kHz unless otherwise stated.

DNL
f_{SCLK} = 1 MHz

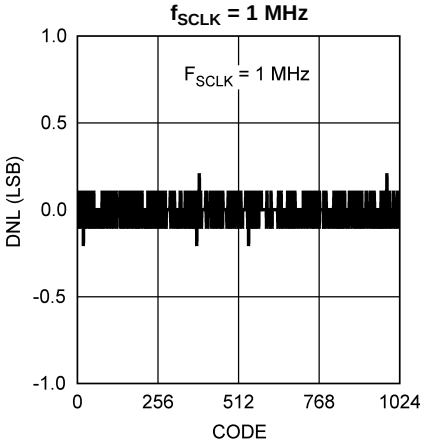

Figure 4.

INL
f_{SCLK} = 1 MHz

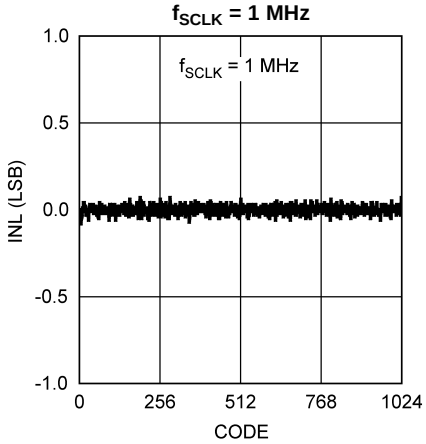

Figure 5.

DNL
f_{SCLK} = 4 MHz

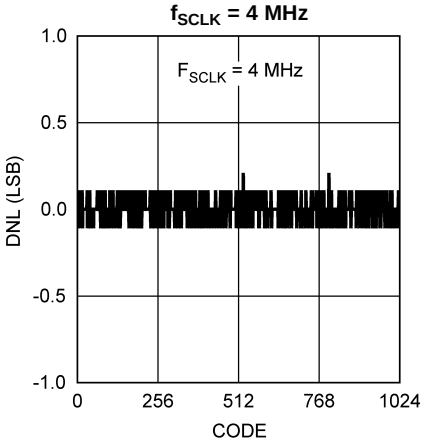

Figure 6.

INL
f_{SCLK} = 4 MHz

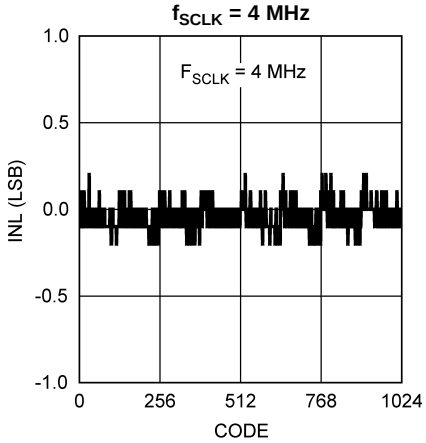

Figure 7.

DNL
vs.
Clock Frequency

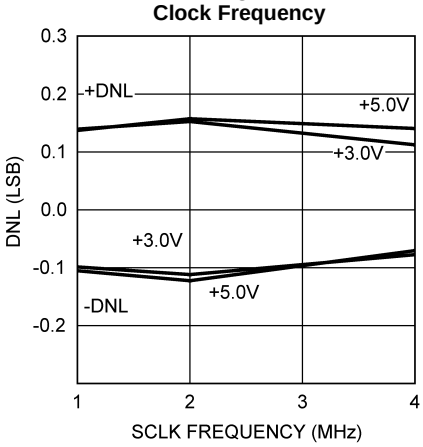

Figure 8.

INL
vs.
Clock Frequency

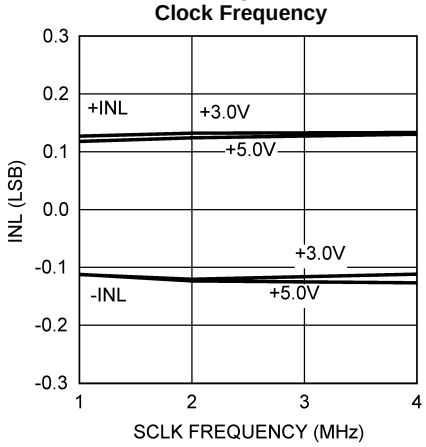

Figure 9.

Typical Performance Characteristics (continued)

T_A = +25°C, f_{SAMPLE} = 50 ksps to 200 ksps, f_{SCLK} = 1 MHz to 4 MHz, f_{IN} = 100 kHz unless otherwise stated.

SNR vs. Clock Frequency

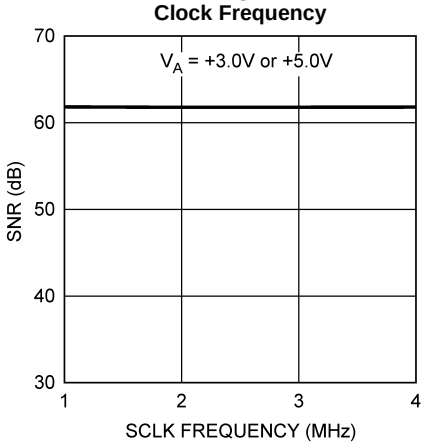

Figure 10.

SINAD vs. Clock Frequency

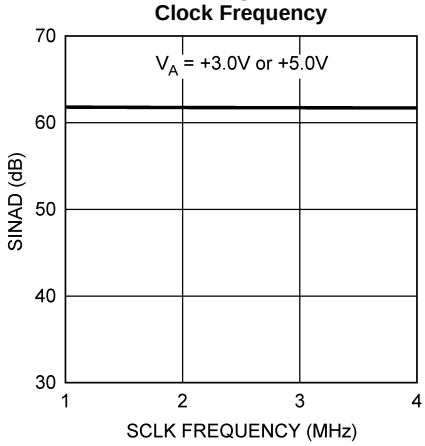

Figure 11.

SFDR vs. Clock Frequency

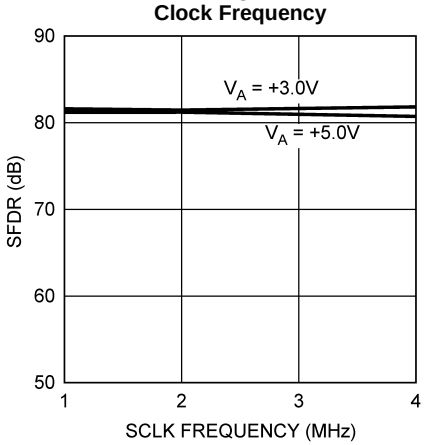

Figure 12.

THD vs. Clock Frequency

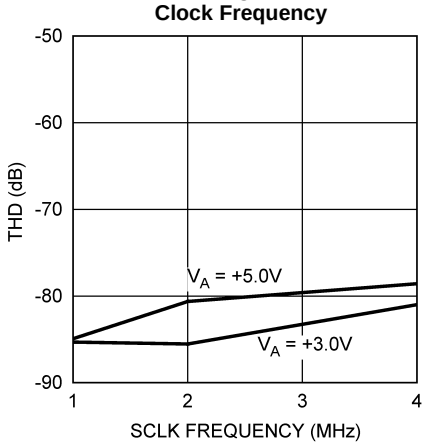

Figure 13.

Spectral Response, V_A = 5.25V f_{SCLK} = 4 MHz

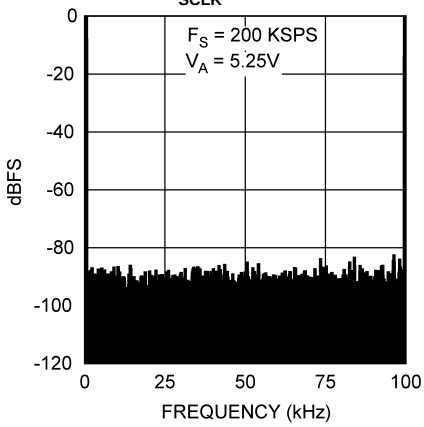

Figure 14.

Power Consumption vs. Throughput, f_{SCLK} = 4 MHz

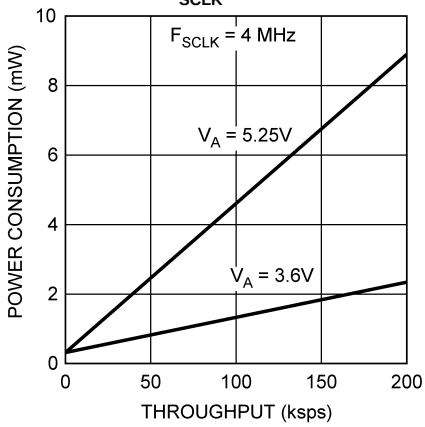

Figure 15.

Copyright © 2005–2013, Texas Instruments Incorporated

APPLICATIONS INFORMATION

ADC101S021 Operation

The ADC101S021 is a successive-approximation analog-to-digital converter designed around a charge-redistribution digital-to-analog converter core. Simplified schematics of the ADC101S021 in both track and hold modes are shown in Figure 16 and Figure 17, respectively. In Figure 16, the device is in track mode: switch SW1 connects the sampling capacitor to the input and SW2 balances the comparator inputs. The device is in this state until $\overline{CS}$ is brought low, at which point the device moves to the hold mode.

Figure 17 shows the device in hold mode: switch SW1 connects the sampling capacitor to ground, maintaining the sampled voltage, and switch SW2 unbalances the comparator. The control logic then instructs the charge-redistribution DAC to add or subtract fixed amounts of charge from the sampling capacitor until the comparator is balanced. When the comparator is balanced, the digital word supplied to the DAC is the digital representation of the analog input voltage. The device moves from hold mode to track mode on the 13th rising edge of SCLK.

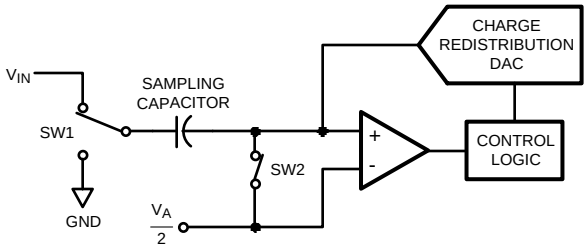

Figure 16. ADC101S021 in Track Mode

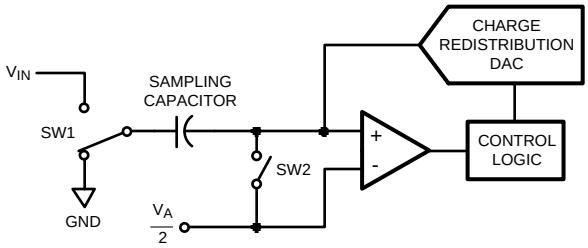

Figure 17. ADC101S021 in Hold Mode

Using the ADC101S021

The serial interface timing diagram for the ADC is shown in Figure 3. $\overline{CS}$ is chip select, which initiates conversions on the ADC and frames the serial data transfers. SCLK (serial clock) controls both the conversion process and the timing of serial data. SDATA is the serial data out pin, where a conversion result is found as a serial data stream.

Basic operation of the ADC begins with $\overline{CS}$ going low, which initiates a conversion process and data transfer. Subsequent rising and falling edges of SCLK will be labelled with reference to the falling edge of $\overline{CS}$; for example, "the third falling edge of SCLK" shall refer to the third falling edge of SCLK after $\overline{CS}$ goes low.

At the fall of $\overline{CS}$, the SDATA pin comes out of TRI-STATE and the converter moves from track mode to hold mode. The input signal is sampled and held for conversion on the falling edge of $\overline{CS}$. The converter moves from hold mode to track mode on the 13th rising edge of SCLK (see Figure 3). It is at this point that the interval for the T_{ACQ} specification begins. In the worst case, 350ns must pass between the 13th rising edge and the next falling edge of SCLK. The SDATA pin will be placed back into TRI-STATE after the 16th falling edge of SCLK, or at the rising edge of $\overline{CS}$, whichever occurs first. After a conversion is completed, the quiet time (t_{QUIET}) must be satisfied before bringing $\overline{CS}$ low again to begin another conversion.

Sixteen SCLK cycles are required to read a complete sample from the ADC. The sample bits (including leading or trailing zeroes) are clocked out on falling edges of SCLK, and are intended to be clocked in by a receiver on subsequent rising edges of SCLK. The ADC will produce three leading zero bits on SDATA, followed by ten data bits, most significant first. After the data bits, the ADC will clock out two trailing zeros.

If $\overline{CS}$ goes low before the rising edge of SCLK, an additional (fourth) zero bit may be captured by the next falling edge of SCLK.

Determining Throughput

Throughput depends on the frequency of SCLK and how much time is allowed to elapse between the end of one conversion and the start of another. At the maximum specified SCLK frequency, the maximum ensured throughput is obtained by using a 20 SCLK frame. As shown in Figure 3, the minimum allowed time between $\overline{CS}$ falling edges is determined by 1) 12.5 SCLKs for Hold mode, 2) the larger of two quantities: either the minimum required time for Track mode (t_{ACQ}) or 2.5 SCLKs to finish reading the result and 3) 0, 1/2 or 1 SCLK padding to ensure an even number of SCLK cycles so there is a falling SCLK edge when CS next falls. For example, at the fastest rate for this family of parts, SCLK is 20MHz and 2.5 SCLKs are 125ns, so the minimum time between CS falling edges is calculated by :

$$12.5*50ns + 350ns + 0.5*50ns = 1000ns \quad (2)$$

(12.5 SCLKs + t_{ACQ} + 1/2 SCLK) which corresponds to a maximum throughput of 1MSPS. At the slowest rate for this family, SCLK is 1MHz. Using a 20 cycle conversion frame as shown in Figure 3 yields a 20µs time between $\overline{CS}$ falling edges for a throughput of 50KSPS. It is possible, however, to use fewer than 20 clock cycles provided the timing parameters are met. With a 1MHz SCLK, there are 2500ns in 2.5 SCLK cycles, which is greater than t_{ACQ}. After the last data bit has come out, the clock will need one full cycle to return to a falling edge. Thus the total time between falling edges of $\overline{CS}$ is 12.5*1µs +2.5*1µs +1*1µs=16µs which is a throughput of 62.5KSPS.

ADC101S021 Transfer Function

The output format of the ADC is straight binary. Code transitions occur midway between successive integer LSB values. The LSB width for the ADC is V_A/1024. The ideal transfer characteristic is shown in Figure 18. The transition from an output code of 00 0000 0000 to a code of 00 0000 0001 is at 1/2 LSB, or a voltage of V_A/2048. Other code transitions occur at steps of one LSB.

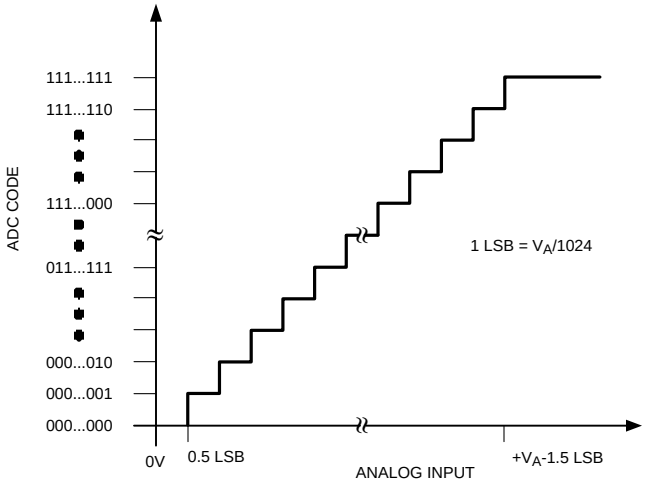

Figure 18. Ideal Transfer Characteristic

Copyright © 2005–2013, Texas Instruments Incorporated

Typical Application Circuit

A typical application of the ADC is shown in Figure 19. Power is provided in this example by the TI LP2950 low-dropout voltage regulator, available in a variety of fixed and adjustable output voltages. The power supply pin is bypassed with a capacitor network located close to the ADC. Because the reference for the ADC is the supply voltage, any noise on the supply will degrade device noise performance. To keep noise off the supply, use a dedicated linear regulator for this device, or provide sufficient decoupling from other circuitry to keep noise off the ADC supply pin. Because of the ADC's low power requirements, it is also possible to use a precision reference as a power supply to maximize performance. The three-wire interface is shown connected to a microprocessor or DSP.

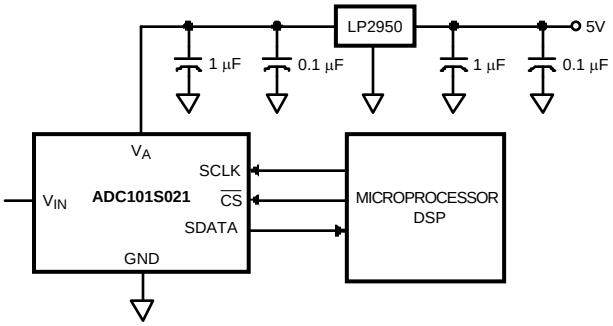

Figure 19. Typical Application Circuit

Analog Inputs

An equivalent circuit for the ADC's input is shown in Figure 20. Diodes D1 and D2 provide ESD protection for the analog inputs. At no time should the analog input go beyond (V_A + 300 mV) or (GND − 300 mV), as these ESD diodes will begin conducting, which could result in erratic operation. For this reason, the ESD diodes should not be used to clamp the input signal.

The capacitor C1 in Figure 20 has a typical value of 4 pF, and is mainly the package pin capacitance. Resistor R1 is the on resistance of the track / hold switch, and is typically 500Ω. Capacitor C2 is the ADC sampling capacitor and is typically 26 pF. The ADC will deliver best performance when driven by a low-impedance source to eliminate distortion caused by the charging of the sampling capacitance. This is especially important when using the ADC to sample AC signals. Also important when sampling dynamic signals is an anti-aliasing filter

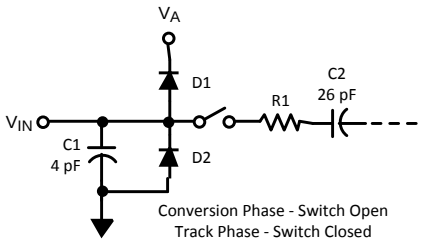

Figure 20. Equivalent Input Circuit

Digital Inputs and Outputs

The ADC digital inputs (SCLK and $\overline{CS}$) are not limited by the same maximum ratings as the analog inputs. The digital input pins are instead limited to +5.25V with respect to GND, regardless of V_A, the supply voltage. This allows the ADC to be interfaced with a wide range of logic levels, independent of the supply voltage.

Copyright © 2005–2013, Texas Instruments Incorporated

Modes of Operation

The ADC has two possible modes of operation: normal mode, and shutdown mode. The ADC enters normal mode (and a conversion process is begun) when $\overline{CS}$ is pulled low. The device will enter shutdown mode if $\overline{CS}$ is pulled high before the tenth falling edge of SCLK after $\overline{CS}$ is pulled low, or will stay in normal mode if $\overline{CS}$ remains low. Once in shutdown mode, the device will stay there until $\overline{CS}$ is brought low again. By varying the ratio of time spent in the normal and shutdown modes, a system may trade-off throughput for power consumption, with a sample rate as low as zero.

Normal Mode

The fastest possible throughput is obtained by leaving the ADC in normal mode at all times, so there are no power-up delays. To keep the device in normal mode continuously, $\overline{CS}$ must be kept low until after the 10th falling edge of SCLK after the start of a conversion (remember that a conversion is initiated by bringing $\overline{CS}$ low).

If $\overline{CS}$ is brought high after the 10th falling edge, but before the 16th falling edge, the device will remain in normal mode, but the current conversion will be aborted, and SDATA will return to TRI-STATE (truncating the output word).

Sixteen SCLK cycles are required to read all of a conversion word from the device. After sixteen SCLK cycles have elapsed, $\overline{CS}$ may be idled either high or low until the next conversion. If $\overline{CS}$ is idled low, it must be brought high again before the start of the next conversion, which begins when $\overline{CS}$ is again brought low.

After sixteen SCLK cycles, SDATA returns to TRI-STATE. Another conversion may be started, after t_{QUIET} has elapsed, by bringing $\overline{CS}$ low again.

Shutdown Mode

Shutdown mode is appropriate for applications that either do not sample continuously, or it is acceptable to trade throughput for power consumption. When the ADC is in shutdown mode, all of the analog circuitry is turned off.

To enter shutdown mode, a conversion must be interrupted by bringing $\overline{CS}$ high anytime between the second and tenth falling edges of SCLK, as shown in Figure 21. Once $\overline{CS}$ has been brought high in this manner, the device will enter shutdown mode, the current conversion will be aborted and SDATA will enter TRI-STATE. If $\overline{CS}$ is brought high before the second falling edge of SCLK, the device will not change mode; this is to avoid accidentally changing mode as a result of noise on the $\overline{CS}$ line.

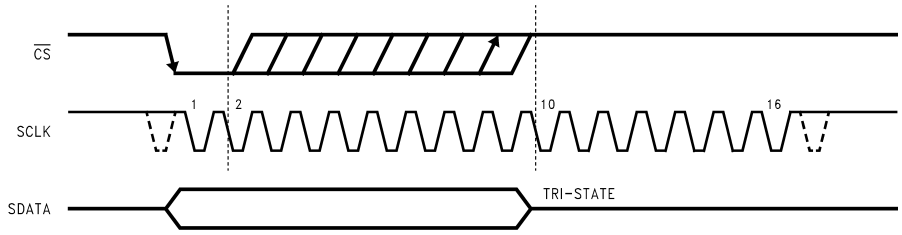

Figure 21. Entering Shutdown Mode

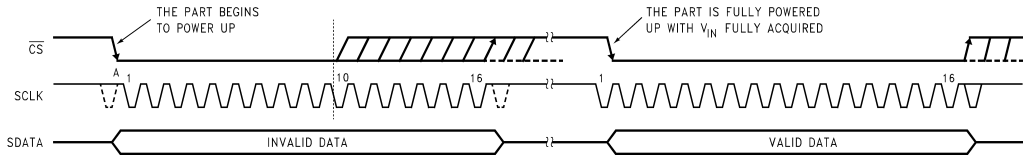

Figure 22. Entering Normal Mode

To exit shutdown mode, bring $\overline{CS}$ back low. Upon bringing $\overline{CS}$ low, the ADC will begin powering up (power-up time is specified in the Timing Specifications table). This power-up delay results in the first conversion result being unusable. The second conversion performed after power-up, however, is valid, as shown in Figure 22.

Copyright © 2005–2013, Texas Instruments Incorporated

If $\overline{CS}$ is brought back high before the 10th falling edge of SCLK, the device will return to shutdown mode. This is done to avoid accidentally entering normal mode as a result of noise on the $\overline{CS}$ line. To exit shutdown mode and remain in normal mode, $\overline{CS}$ must be kept low until after the 10th falling edge of SCLK. The ADC will be fully powered-up after 16 SCLK cycles.

Power Management

The ADC takes time to power-up, either after first applying V_A, or after returning to normal mode from shutdown mode. This corresponds to one "dummy" conversion for any SCLK frequency within the specifications in this document. After this first dummy conversion, the ADC will perform conversions properly. Note that the t_{QUIET} time must still be included between the first dummy conversion and the second valid conversion.

When the V_A supply is first applied, the ADC may power up in either of the two modes: normal or shutdown. As such, one dummy conversion should be performed after start-up, as described in the previous paragraph. The part may then be placed into either normal mode or the shutdown mode, as described in Sections Normal Mode and Shutdown Mode.

When the ADC is operated continuously in normal mode, the maximum ensured throughput is f_{SCLK} / 20 at the maximum specified f_{SCLK}. Throughput may be traded for power consumption by running f_{SCLK} at its maximum specified rate and performing fewer conversions per unit time, raising the ADC $\overline{CS}$ line after the 10th and before the 15th fall of SCLK between conversions. A plot of typical power consumption versus throughput is shown in the Typical Performance Characteristics section. To calculate the power consumption for a given throughput, multiply the fraction of time spent in the normal mode by the normal mode power consumption and add the fraction of time spent in shutdown mode multiplied by the shutdown mode power consumption. Note that the curve of power consumption vs. throughput is essentially linear. This is because the power consumption in the shutdown mode is so small that it can be ignored for all practical purposes.

Power Supply Noise Considerations

The charging of any output load capacitance requires current from the power supply, V_A. The current pulses required from the supply to charge the output capacitance will cause voltage variations on the supply. If these variations are large enough, they could degrade SNR and SINAD performance of the ADC. Furthermore, discharging the output capacitance when the digital output goes from a logic high to a logic low will dump current into the die substrate, which is resistive. Load discharge currents will cause "ground bounce" noise in the substrate that will degrade noise performance if that current is large enough. The larger the output capacitance, the more current flows through the die substrate and the greater is the noise coupled into the analog channel, degrading noise performance.

To keep noise out of the power supply, keep the output load capacitance as small as practical. It is good practice to use a 100Ω series resistor at the ADC output, located as close to the ADC output pin as practical. This will limit the charge and discharge current of the output capacitance and maintain noise performance.

Copyright © 2005–2013, Texas Instruments Incorporated

REVISION HISTORY

Changes from Revision E (March 2013) to Revision F	Page
• Changed layout of National Data Sheet to TI format	15

Copyright © 2005–2013, Texas Instruments Incorporated

PACKAGING INFORMATION

Orderable Device	Status (1)	Package Type	Package Drawing	Pins	Package Qty	Eco Plan (2)	Lead/Ball Finish	MSL Peak Temp (3)	Op Temp (°C)	Device Marking (4/5)	Samples
ADC101S021CIMF	ACTIVE	SOT-23	DBV	6		TBD	Call TI	Call TI	-40 to 85	X08C	Samples
ADC101S021CIMF/NOPB	ACTIVE	SOT-23	DBV	6	1000	Green (RoHS & no Sb/Br)	CU SN	Level-1-260C-UNLIM	-40 to 85	X08C	Samples
ADC101S021CIMFX	ACTIVE	SOT-23	DBV	6		TBD	Call TI	Call TI	-40 to 85	X08C	Samples
ADC101S021CIMFX/NOPB	ACTIVE	SOT-23	DBV	6	3000	Green (RoHS & no Sb/Br)	CU SN	Level-1-260C-UNLIM	-40 to 85	X08C	Samples
ADC101S021CISD	ACTIVE	WSON	NGF	6		TBD	Call TI	Call TI	-40 to 85	X8C	Samples
ADC101S021CISD/NOPB	ACTIVE	WSON	NGF	6	1000	Green (RoHS & no Sb/Br)	CU SN	Level-1-260C-UNLIM	-40 to 85	X8C	Samples
ADC101S021CISDX	ACTIVE	WSON	NGF	6		TBD	Call TI	Call TI	-40 to 85	X8C	Samples
ADC101S021CISDX/NOPB	ACTIVE	WSON	NGF	6	4500	Green (RoHS & no Sb/Br)	CU SN	Level-1-260C-UNLIM	-40 to 85	X8C	Samples

(1) The marketing status values are defined as follows:
ACTIVE: Product device recommended for new designs.
LIFEBUY: TI has announced that the device will be discontinued, and a lifetime-buy period is in effect.
NRND: Not recommended for new designs. Device is in production to support existing customers, but TI does not recommend using this part in a new design.
PREVIEW: Device has been announced but is not in production. Samples may or may not be available.
OBSOLETE: TI has discontinued the production of the device.

(2) Eco Plan - The planned eco-friendly classification: Pb-Free (RoHS), Pb-Free (RoHS Exempt), or Green (RoHS & no Sb/Br) - please check http://www.ti.com/productcontent for the latest availability information and additional product content details.
TBD: The Pb-Free/Green conversion plan has not been defined.
Pb-Free (RoHS): TI's terms "Lead-Free" or "Pb-Free" mean semiconductor products that are compatible with the current RoHS requirements for all 6 substances, including the requirement that lead not exceed 0.1% by weight in homogeneous materials. Where designed to be soldered at high temperatures, TI Pb-Free products are suitable for use in specified lead-free processes.
Pb-Free (RoHS Exempt): This component has a RoHS exemption for either 1) lead-based flip-chip solder bumps used between the die and package, or 2) lead-based die adhesive used between the die and leadframe. The component is otherwise considered Pb-Free (RoHS compatible) as defined above.
Green (RoHS & no Sb/Br): TI defines "Green" to mean Pb-Free (RoHS compatible), and free of Bromine (Br) and Antimony (Sb) based flame retardants (Br or Sb do not exceed 0.1% by weight in homogeneous material)

(3) MSL, Peak Temp. -- The Moisture Sensitivity Level rating according to the JEDEC industry standard classifications, and peak solder temperature.

(4) There may be additional marking, which relates to the logo, the lot trace code information, or the environmental category on the device.

(5) Multiple Device Markings will be inside parentheses. Only one Device Marking contained in parentheses and separated by a "~" will appear on a device. If a line is indented then it is a continuation of the previous line and the two combined represent the entire Device Marking for that device.

Important Information and Disclaimer: The information provided on this page represents TI's knowledge and belief as of the date that it is provided. TI bases its knowledge and belief on information provided by third parties, and makes no representation or warranty as to the accuracy of such information. Efforts are underway to better integrate information from third parties. TI has taken and continues to take reasonable steps to provide representative and accurate information but may not have conducted destructive testing or chemical analysis on incoming materials and chemicals. TI and TI suppliers consider certain information to be proprietary, and thus CAS numbers and other limited information may not be available for release.

In no event shall TI's liability arising out of such information exceed the total purchase price of the TI part(s) at issue in this document sold by TI to Customer on an annual basis.

TAPE AND REEL INFORMATION

REEL DIMENSIONS

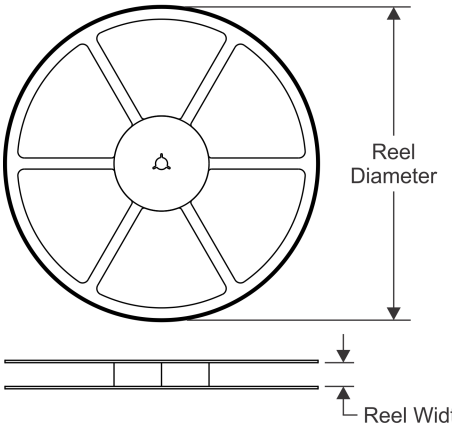

TAPE DIMENSIONS

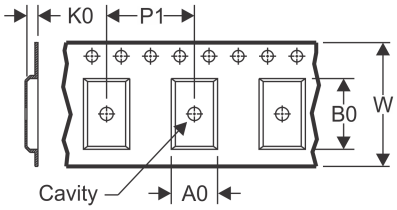

A0	Dimension designed to accommodate the component width
B0	Dimension designed to accommodate the component length
K0	Dimension designed to accommodate the component thickness
W	Overall width of the carrier tape
P1	Pitch between successive cavity centers

QUADRANT ASSIGNMENTS FOR PIN 1 ORIENTATION IN TAPE

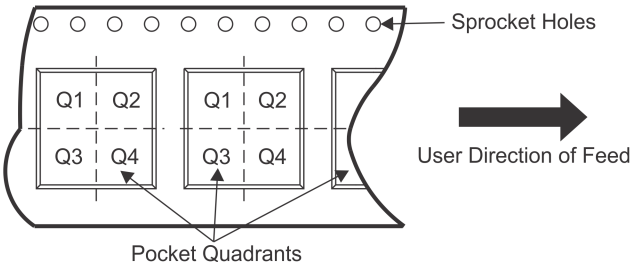

*All dimensions are nominal

Device	Package Type	Package Drawing	Pins	SPQ	Reel Diameter (mm)	Reel Width W1 (mm)	A0 (mm)	B0 (mm)	K0 (mm)	P1 (mm)	W (mm)	Pin1 Quadrant
ADC101S021CIMF/NOPB	SOT-23	DBV	6	1000	178.0	8.4	3.2	3.2	1.4	4.0	8.0	Q3
ADC101S021CIMFX/NOPB	SOT-23	DBV	6	3000	178.0	8.4	3.2	3.2	1.4	4.0	8.0	Q3
ADC101S021CISD/NOPB	WSON	NGF	6	1000	178.0	12.4	2.8	2.5	1.0	8.0	12.0	Q1
ADC101S021CISDX/NOPB	WSON	NGF	6	4500	330.0	12.4	2.8	2.5	1.0	8.0	12.0	Q1

TAPE AND REEL BOX DIMENSIONS

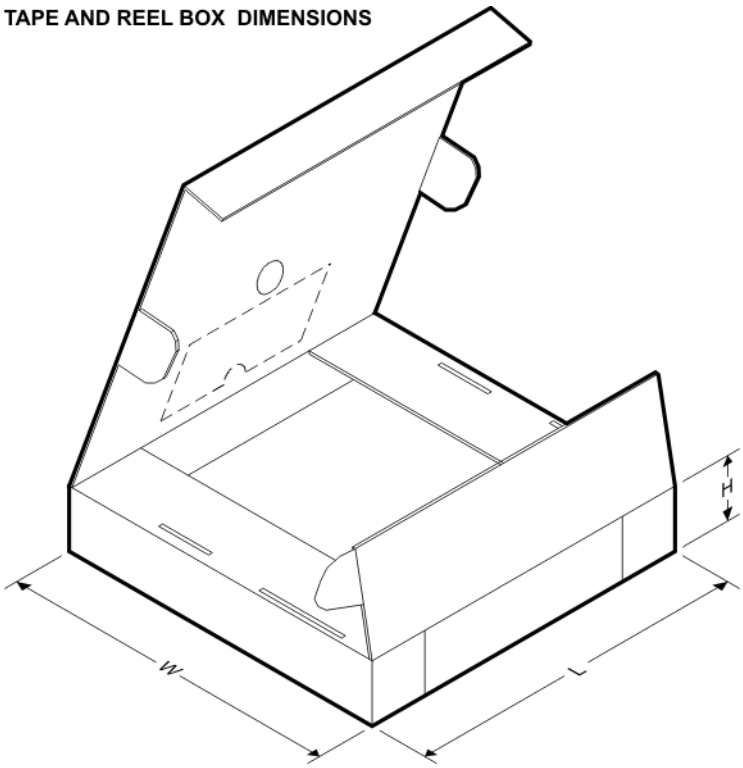

*All dimensions are nominal

Device	Package Type	Package Drawing	Pins	SPQ	Length (mm)	Width (mm)	Height (mm)
ADC101S021CIMF/NOPB	SOT-23	DBV	6	1000	210.0	185.0	35.0
ADC101S021CIMFX/NOPB	SOT-23	DBV	6	3000	210.0	185.0	35.0
ADC101S021CISD/NOPB	WSON	NGF	6	1000	210.0	185.0	35.0
ADC101S021CISDX/NOPB	WSON	NGF	6	4500	367.0	367.0	35.0

DBV (R-PDSO-G6) PLASTIC SMALL-OUTLINE PACKAGE

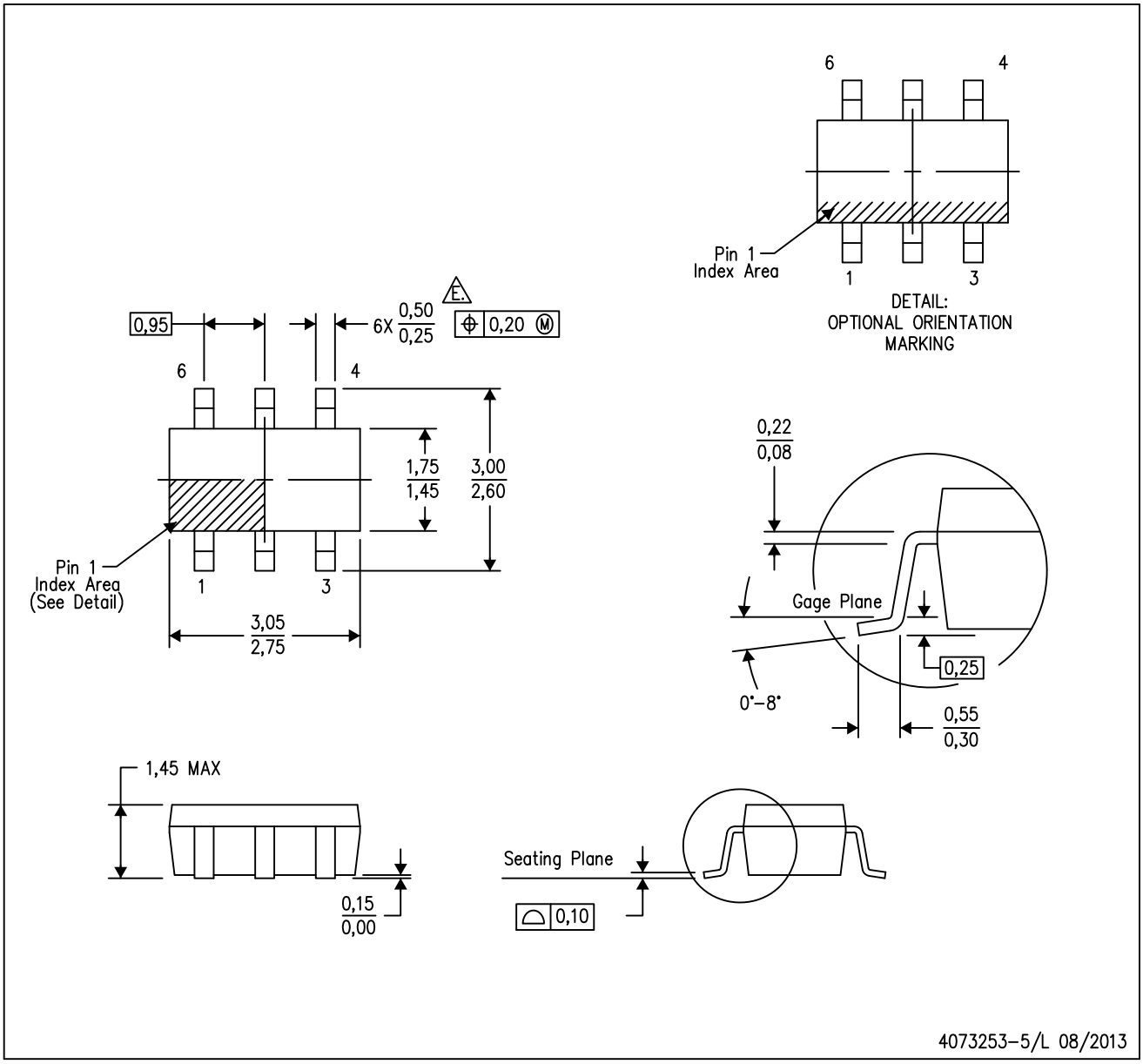

NOTES:
- A. All linear dimensions are in millimeters.
- B. This drawing is subject to change without notice.
- C. Body dimensions do not include mold flash or protrusion. Mold flash and protrusion shall not exceed 0.15 per side.
- D. Leads 1,2,3 may be wider than leads 4,5,6 for package orientation.
- E. Falls within JEDEC MO-178 Variation AB, except minimum lead width.

NGF0006A

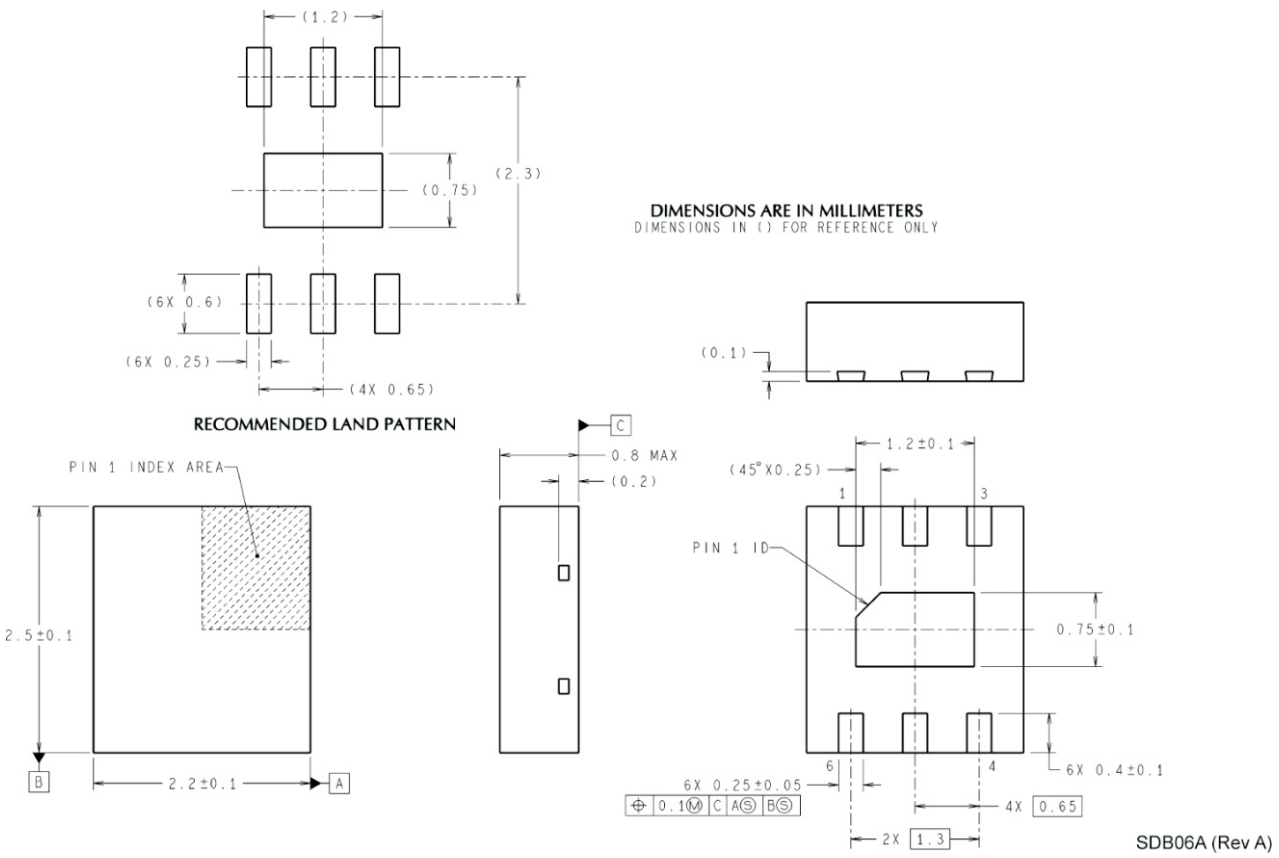
(1.2)
(2.3)
(0.75)
(6X 0.6)
(6X 0.25)
(4X 0.65)
RECOMMENDED LAND PATTERN
DIMENSIONS ARE IN MILLIMETERS
DIMENSIONS IN () FOR REFERENCE ONLY
(0.1)
PIN 1 INDEX AREA
2.5±0.1
2.2±0.1
B
A
C
0.8 MAX
(0.2)
1.2±0.1
(45°X0.25)
1
3
PIN 1 ID
0.75±0.1
6
4
6X 0.4±0.1
6X 0.25±0.05
0.1 M C A S B S
4X 0.65
2X 1.3
SDB06A (Rev A)

IMPORTANT NOTICE

Texas Instruments Incorporated and its subsidiaries (TI) reserve the right to make corrections, enhancements, improvements and other changes to its semiconductor products and services per JESD46, latest issue, and to discontinue any product or service per JESD48, latest issue. Buyers should obtain the latest relevant information before placing orders and should verify that such information is current and complete. All semiconductor products (also referred to herein as “components”) are sold subject to TI’s terms and conditions of sale supplied at the time of order acknowledgment.

TI warrants performance of its components to the specifications applicable at the time of sale, in accordance with the warranty in TI’s terms and conditions of sale of semiconductor products. Testing and other quality control techniques are used to the extent TI deems necessary to support this warranty. Except where mandated by applicable law, testing of all parameters of each component is not necessarily performed.

TI assumes no liability for applications assistance or the design of Buyers’ products. Buyers are responsible for their products and applications using TI components. To minimize the risks associated with Buyers’ products and applications, Buyers should provide adequate design and operating safeguards.

TI does not warrant or represent that any license, either express or implied, is granted under any patent right, copyright, mask work right, or other intellectual property right relating to any combination, machine, or process in which TI components or services are used. Information published by TI regarding third-party products or services does not constitute a license to use such products or services or a warranty or endorsement thereof. Use of such information may require a license from a third party under the patents or other intellectual property of the third party, or a license from TI under the patents or other intellectual property of TI.

Reproduction of significant portions of TI information in TI data books or data sheets is permissible only if reproduction is without alteration and is accompanied by all associated warranties, conditions, limitations, and notices. TI is not responsible or liable for such altered documentation. Information of third parties may be subject to additional restrictions.

Resale of TI components or services with statements different from or beyond the parameters stated by TI for that component or service voids all express and any implied warranties for the associated TI component or service and is an unfair and deceptive business practice. TI is not responsible or liable for any such statements.

Buyer acknowledges and agrees that it is solely responsible for compliance with all legal, regulatory and safety-related requirements concerning its products, and any use of TI components in its applications, notwithstanding any applications-related information or support that may be provided by TI. Buyer represents and agrees that it has all the necessary expertise to create and implement safeguards which anticipate dangerous consequences of failures, monitor failures and their consequences, lessen the likelihood of failures that might cause harm and take appropriate remedial actions. Buyer will fully indemnify TI and its representatives against any damages arising out of the use of any TI components in safety-critical applications.

In some cases, TI components may be promoted specifically to facilitate safety-related applications. With such components, TI’s goal is to help enable customers to design and create their own end-product solutions that meet applicable functional safety standards and requirements. Nonetheless, such components are subject to these terms.

No TI components are authorized for use in FDA Class III (or similar life-critical medical equipment) unless authorized officers of the parties have executed a special agreement specifically governing such use.

Only those TI components which TI has specifically designated as military grade or “enhanced plastic” are designed and intended for use in military/aerospace applications or environments. Buyer acknowledges and agrees that any military or aerospace use of TI components which have ***not*** been so designated is solely at the Buyer's risk, and that Buyer is solely responsible for compliance with all legal and regulatory requirements in connection with such use.

TI has specifically designated certain components as meeting ISO/TS16949 requirements, mainly for automotive use. In any case of use of non-designated products, TI will not be responsible for any failure to meet ISO/TS16949.

Products		**Applications**	
Audio	www.ti.com/audio	Automotive and Transportation	www.ti.com/automotive
Amplifiers	amplifier.ti.com	Communications and Telecom	www.ti.com/communications
Data Converters	dataconverter.ti.com	Computers and Peripherals	www.ti.com/computers
DLP® Products	www.dlp.com	Consumer Electronics	www.ti.com/consumer-apps
DSP	dsp.ti.com	Energy and Lighting	www.ti.com/energy
Clocks and Timers	www.ti.com/clocks	Industrial	www.ti.com/industrial
Interface	interface.ti.com	Medical	www.ti.com/medical
Logic	logic.ti.com	Security	www.ti.com/security
Power Mgmt	power.ti.com	Space, Avionics and Defense	www.ti.com/space-avionics-defense
Microcontrollers	microcontroller.ti.com	Video and Imaging	www.ti.com/video
RFID	www.ti-rfid.com		
OMAP Applications Processors	www.ti.com/omap	**TI E2E Community**	e2e.ti.com
Wireless Connectivity	www.ti.com/wirelessconnectivity		

Mailing Address: Texas Instruments, Post Office Box 655303, Dallas, Texas 75265
Copyright © 2013, Texas Instruments Incorporated